RAIJINTEK

NYX PRO

OPEN FRAME PERFORMANCE MONSTER

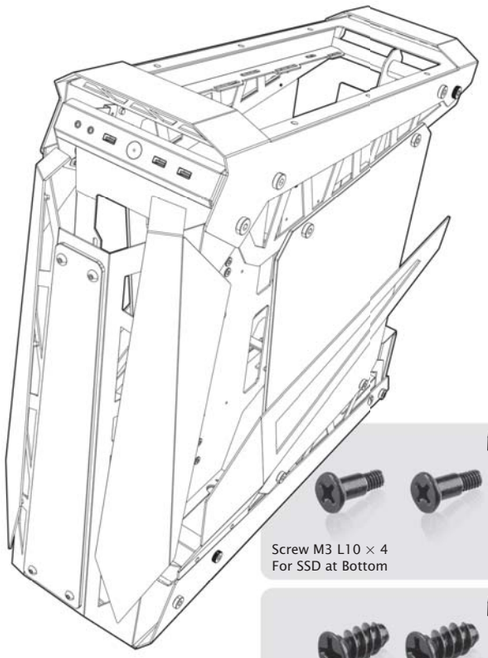

① Screw #6-32 L6 × 4
For PSU

② Screw #6-32 L5 × 10
For VGA Holder

③ Screw M3 L10 × 4
For SSD at Bottom

④ Screw #6-32 L10 × 6
For HDD at Bottom

⑤ Fan Screw × 4
For Fan

⑥ Screw M3 L5 × 17
For MB Stand-off

⑦ Screw L3.5 × 2
To Lock the Bottom of HDD & SSD

⑧ Screw #6-32 L4 × 6
For Side Wing

⑨ HDD & SSD Rubber Pad × 10
For the Bottom of the HDD & SSD

⑩ Allen Key × 1
For Screws with Hexagonal Sockets

⑪ Velcro × 4
For Cable Tie

⑫ Holder × 2
To Hold VGA Cards

⑬ Screw M3 L8 × 12
For SSD on MB Tray

⑭ Screw #6-32 L8 × 6
For HDD on MB Tray

⑮ PCIe - Riser Cable 500mm × 1
For VGA Card

Ⓐ Side Wing × 2

GLASS

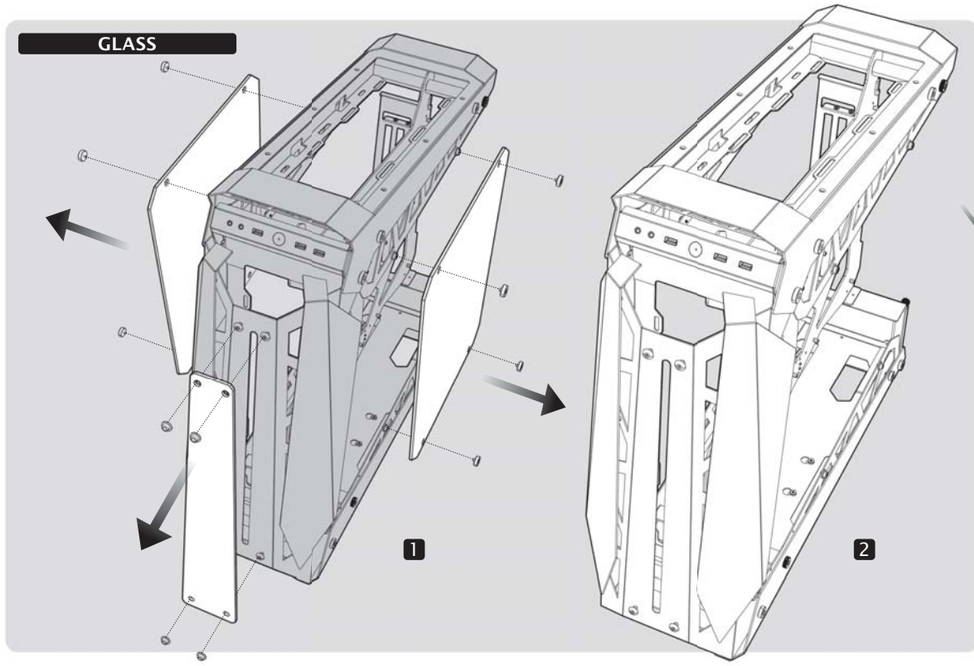

MOTHERBOARD

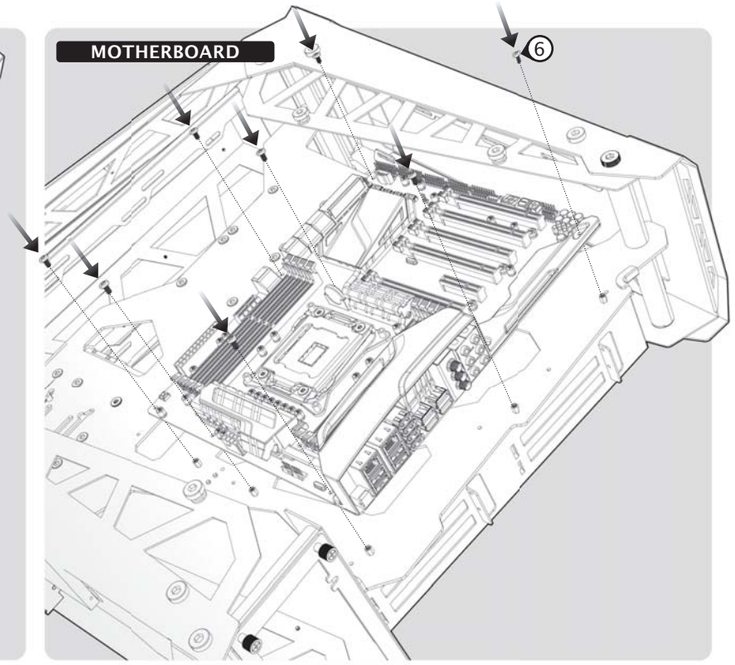

PCI CARD

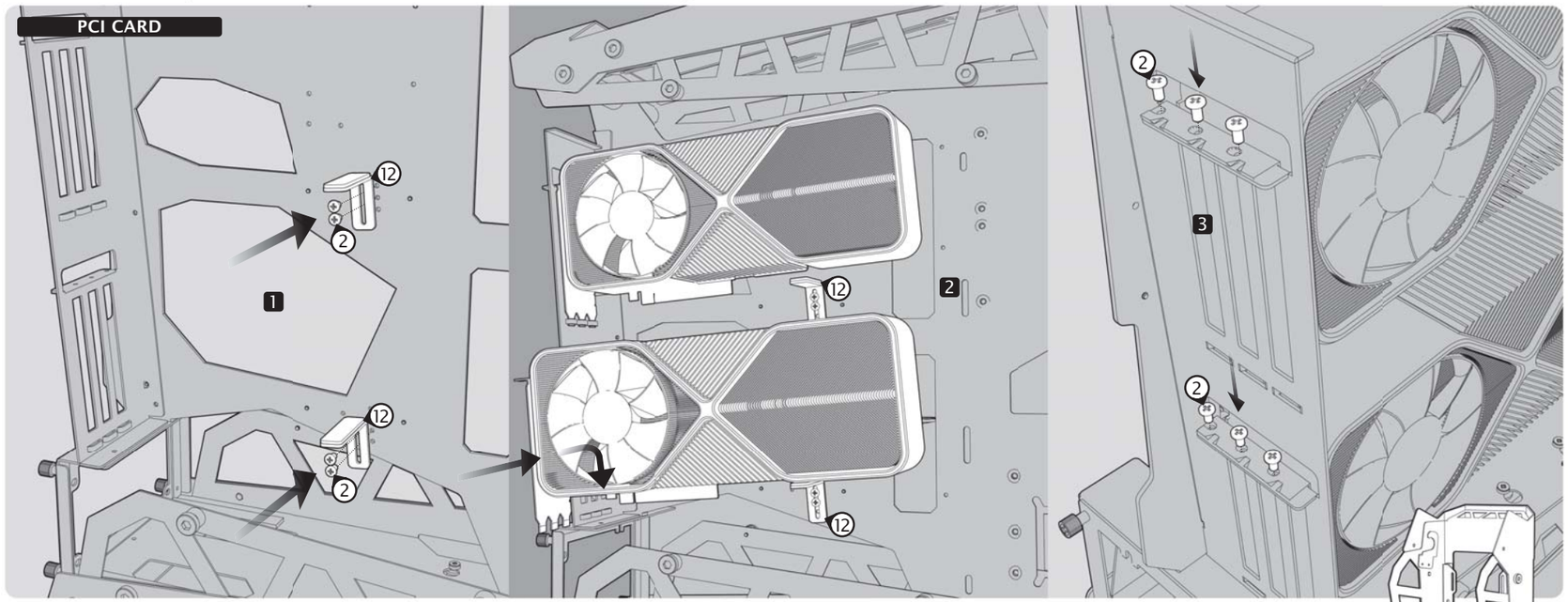

UNFOLDING

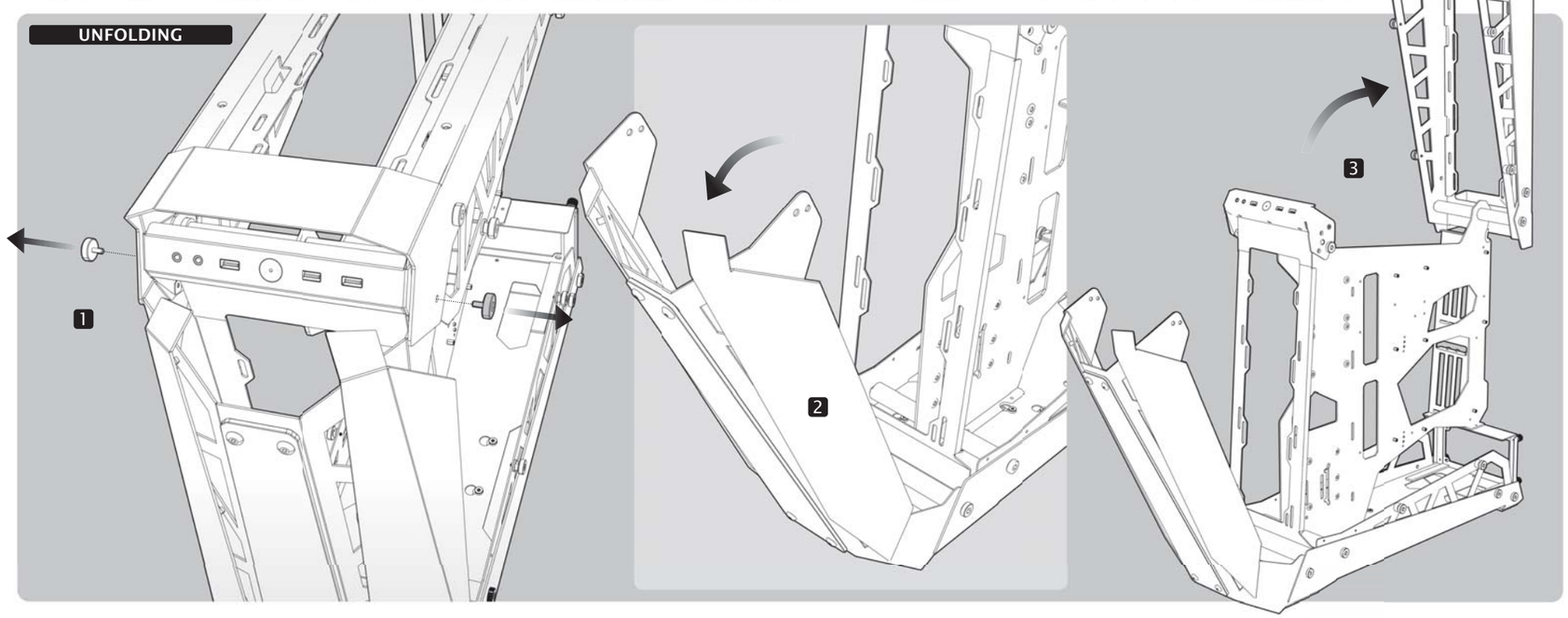

FRONT RADIATOR

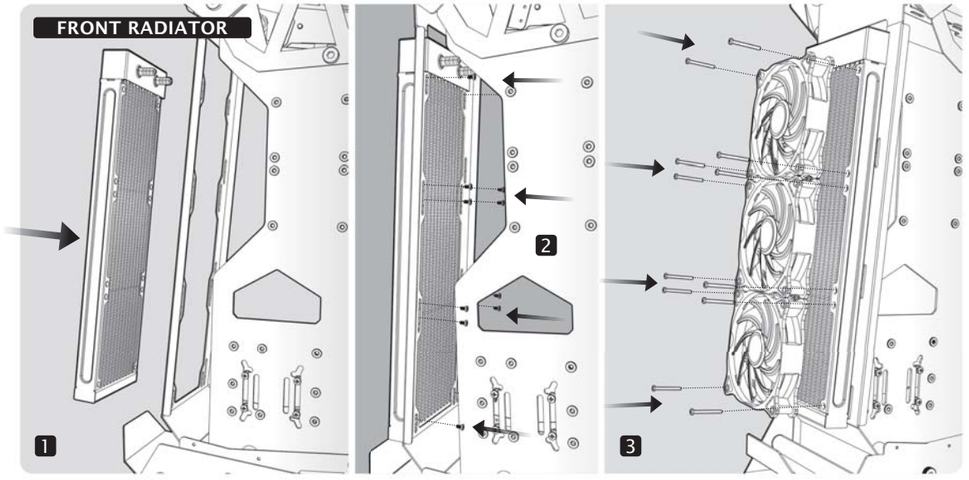

TOP RADIATOR

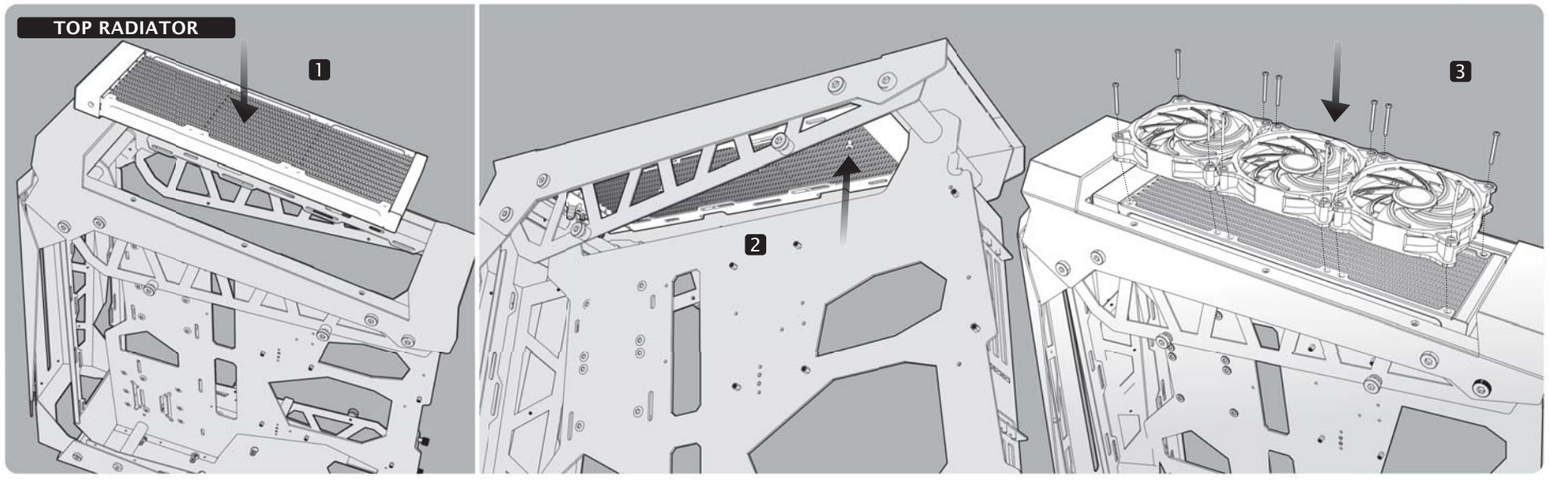

PSU

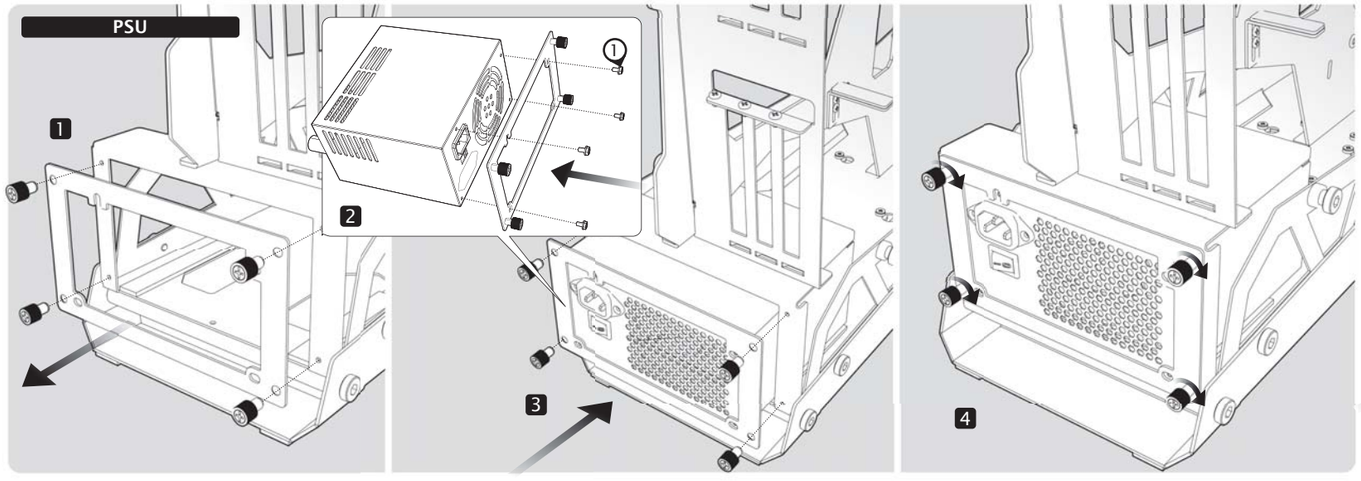

PUMP

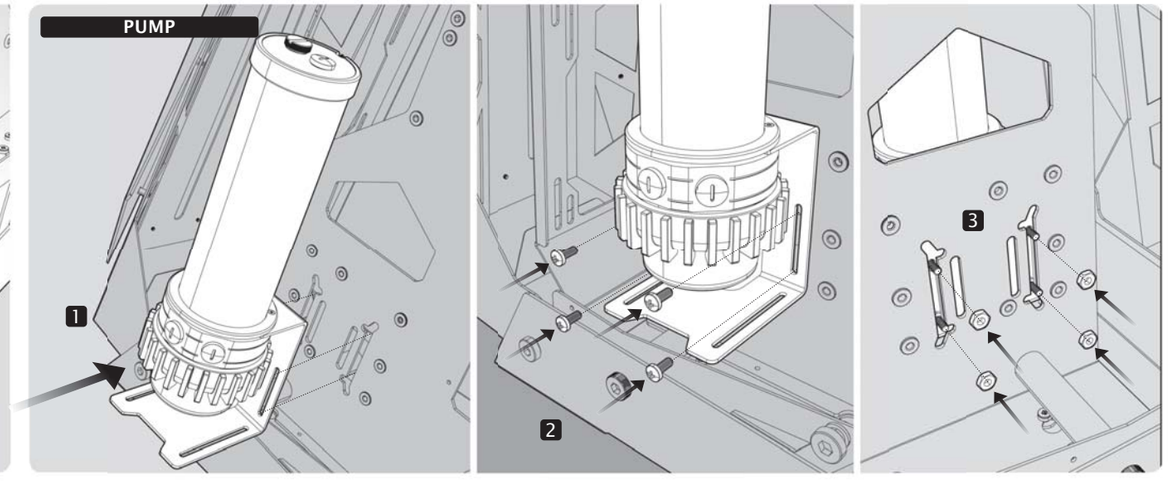

HDD

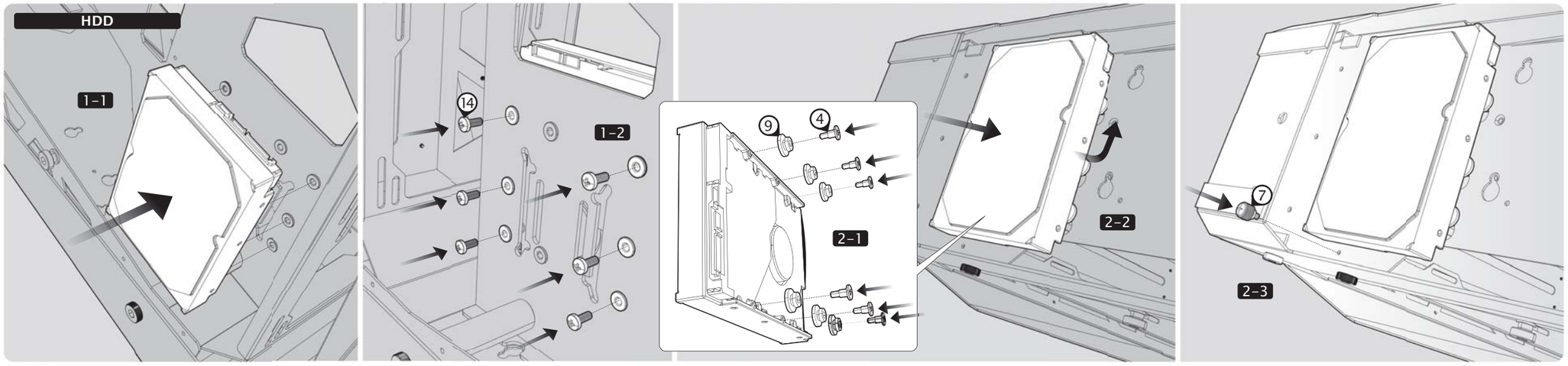

WINGS

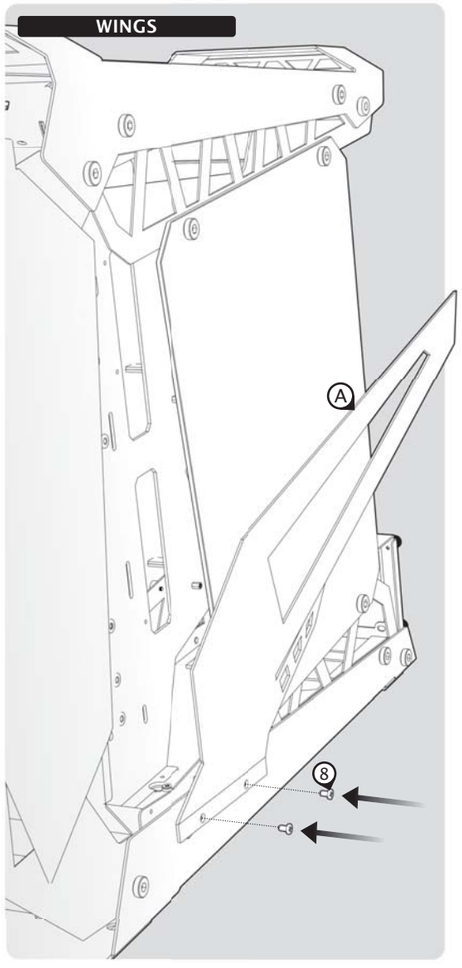
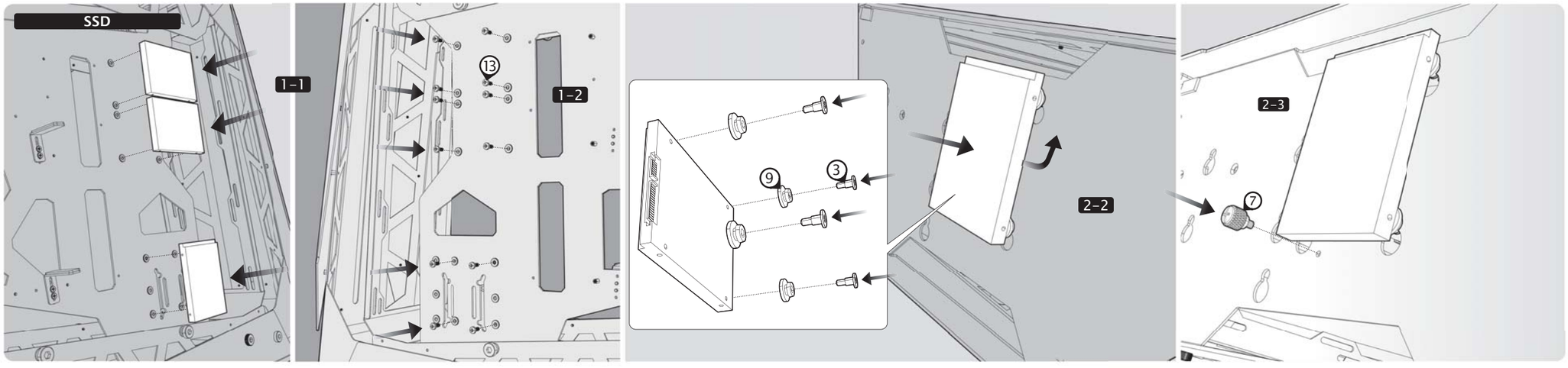
SSD